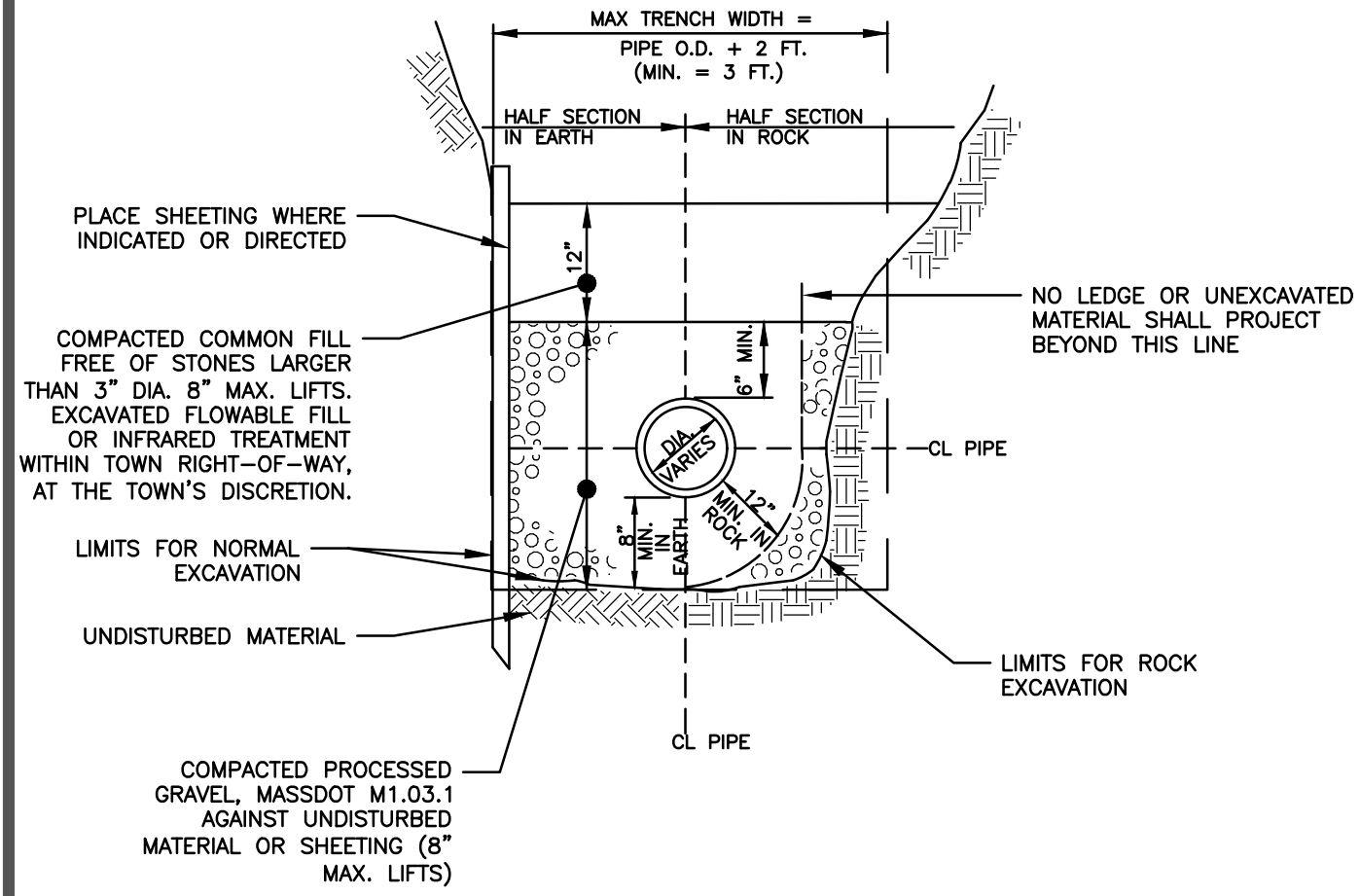

NOTES:
MATERIALS AND METHODS OF INSTALLATION SHALL CONFORM TO THE NORTH ATTLEBORO DEPARTMENT OF PUBLIC WORKS STANDARDS AND SPECIFICATIONS

	TOWN OF NORTH ATTLEBOROUGH, MASSACHUSETTS DEPARTMENT OF PUBLIC WORKS	Date Last Updated: 03/24/2023
	DRAIN TRENCH SECTION DETAIL N.T.S.	Detail Number: D-4.1