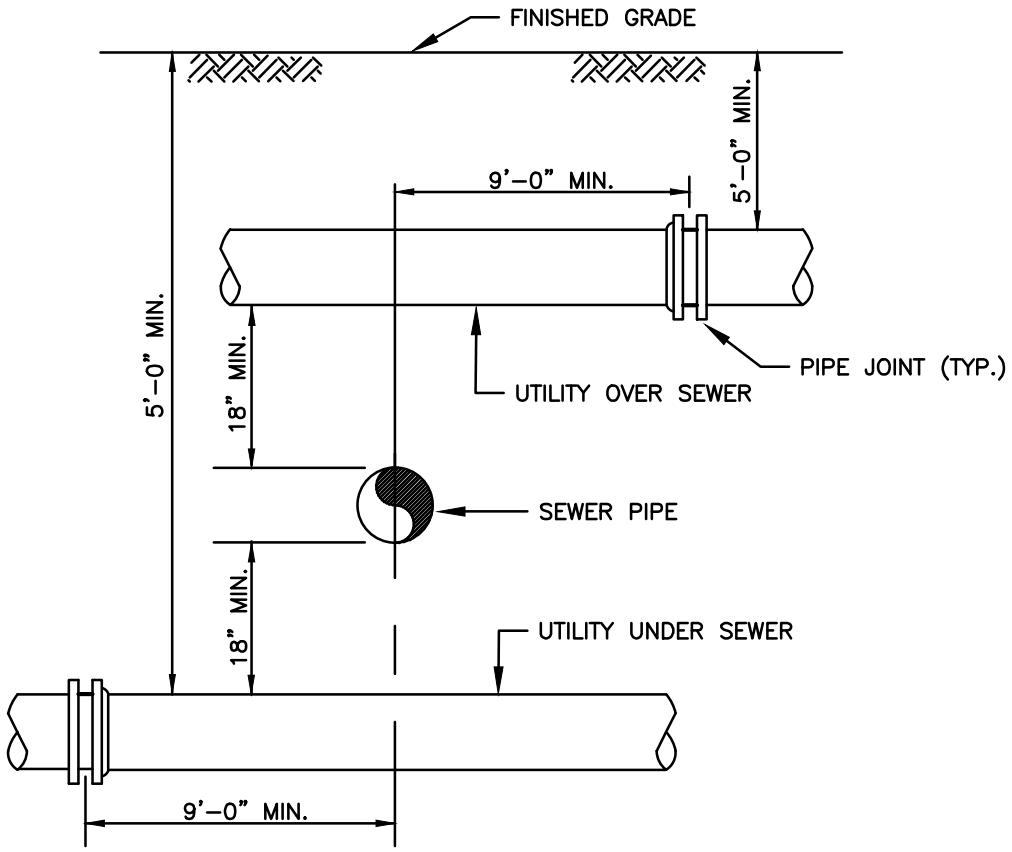

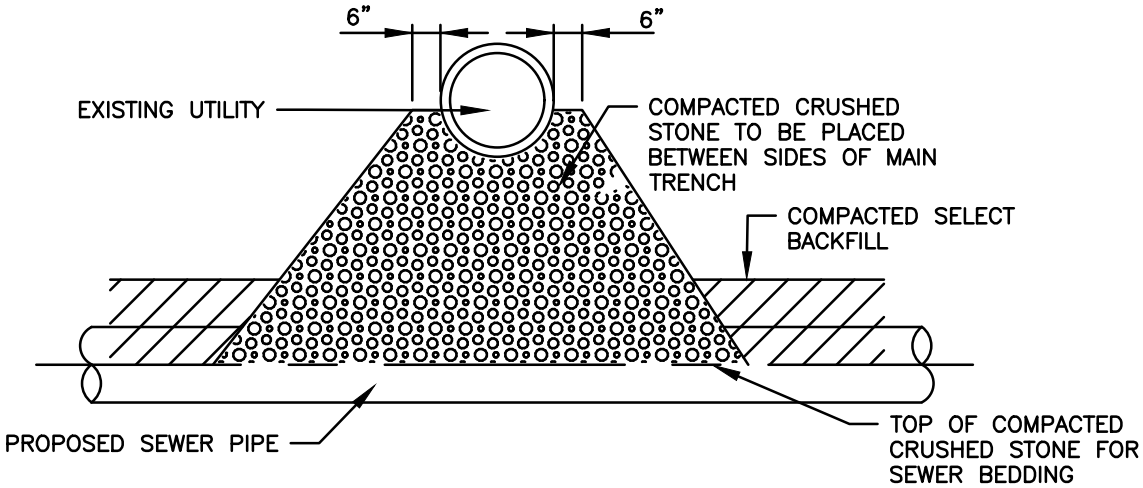

NOTES:

1. SEWERS SHALL BE KEPT REMOTE FROM WATER SUPPLY PIPING AND STRUCTURES. WHEREVER FEASIBLE, SEWERS SHOULD BE LAID AT LEAST 10 FEET (HORIZONTALLY) FROM WATER PIPES. IF SITE CONDITIONS DO NOT ALLOW THIS SEPARATION, PIPES SHALL BE INSTALLED IN SEPARATE TRENCHES AND THE ELEVATIONS OF THE CROWN OF THE SEWER PLACED AT LEAST 18 INCHES BELOW THE INVERT OF THE WATER MAIN.
2. WHENEVER SEWERS MUST CROSS WATER MAINS, THE CROWN OF THE SEWER SHALL BE PLACED AT LEAST 18 INCHES BELOW THE INVERT OF THE WATER MAIN.
3. WHEN IT IS NOT POSSIBLE TO OBTAIN THE REQUIRED HORIZONTAL OR VERTICAL SEPARATION, BOTH PIPES SHALL BE ENCASED IN FLOWABLE FILL FOR A DISTANCE OF 10 FEET ON EITHER SIDE OF THE CROSSING.

	TOWN OF NORTH ATTLEBOROUGH, MASSACHUSETTS DEPARTMENT OF PUBLIC WORKS	Date Last Updated: 03/02/2023
	SUPPORT FOR UTILITIES DETAIL N.T.S.	Detail Number: S-6.1